# Installation Guide

## GL300

Version: 1.0

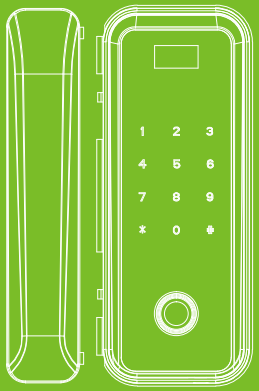

# Pack list

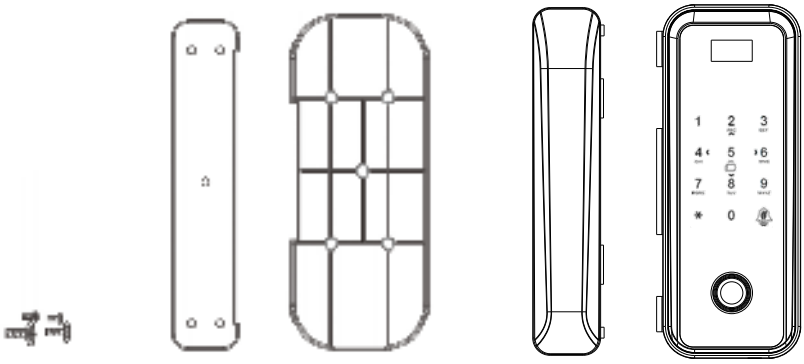


Screws Sticky board Part B Part A

# Installation

1. Peel the sticker off the mounting plate and stick it at the appropriate height

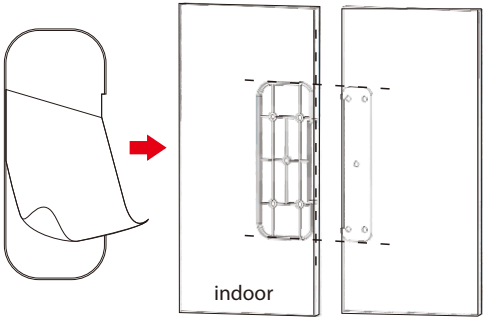


2. Remove screws from GL300 Part A

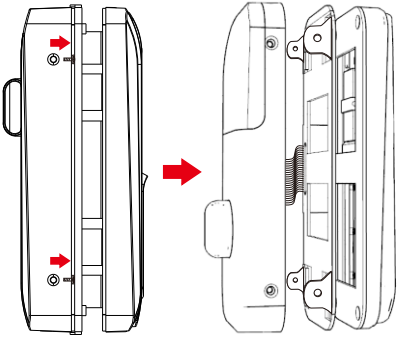

## 3. Detach the cable

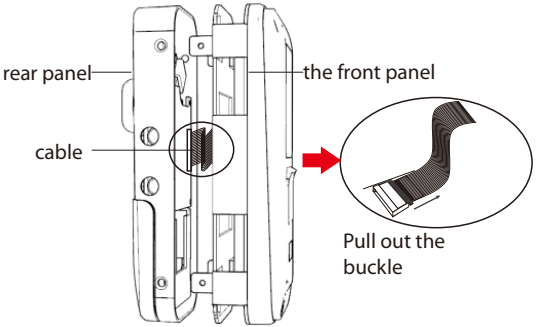


## 4. Install the outdoor unit and tighten the screws

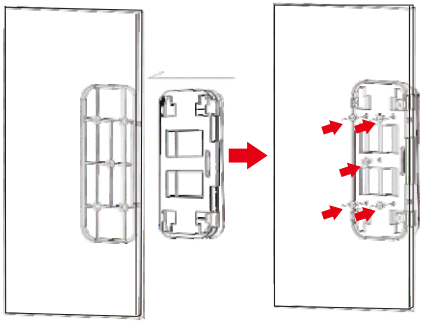

## 5. Secure Part A with the screws

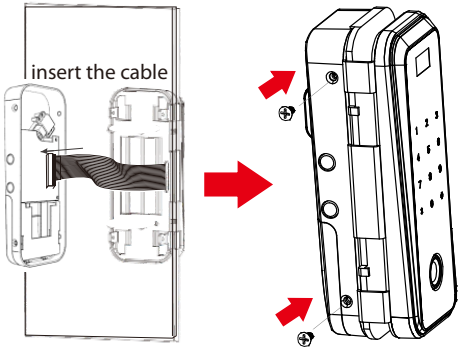


Note: Please be careful while connecting the cable.

## 6. When installing Part B make sure that it is at the same height as Part A

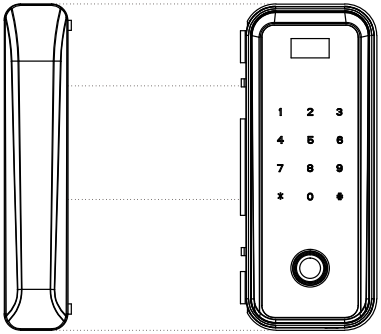


Part B Part A

## 7. Unfasten and remove screws from Part B

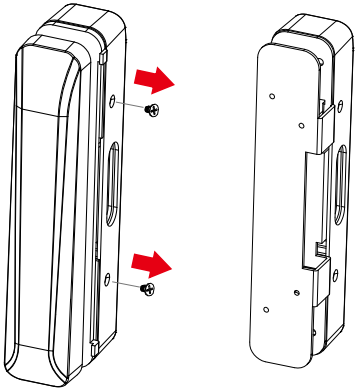

Part B

## 8. Install Part B outdoor unit on the glass door and fix it with the screws

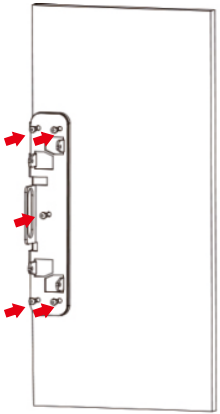

## 9. Install indoor unit on the glass door and secure with the screws

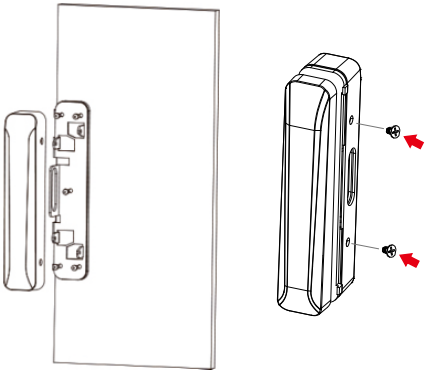

## 10. Install four batteries and fix the cover

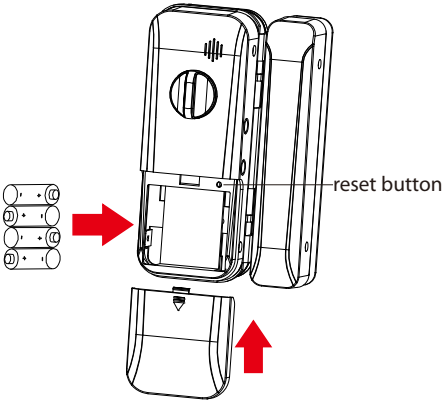

# How to change door open direction

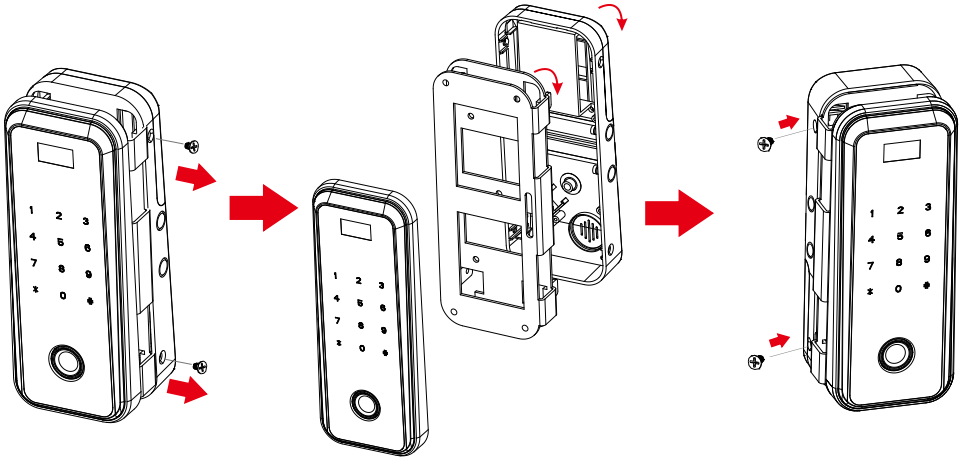


remove the screws

rotate the mounting bracket
and indoor unit180°

reinstall the screws

ZK Building, Wuhe Road, Gangtou, Bantian, Buji Town,
Longgang District, Shenzhen China 518129
Tel: +86 755-89602345
Fax: +86 755-89602394
www.zkteco.com

© Copyright 2018. ZKTeco Inc. ZKTeco Logo is a registered trademark of ZKTeco or a related company. All other product and company names mentioned are used for identification purposes only and may be the trademarks of their respective owners. All specifications are subject to change without notice. All rights reserved.